Pumps Selection

Principles of pumps selection

Selection of the pumping equipment is a crucial point that determines both process parameters and in-use performance of the unit under development. During selection of the type of pump, three basic criteria has to be considered:

1) Process and design requirements

2) Nature of pumped medium

3) Key design parameters

Process and design requirements:

In some cases the pump selection is determined by some stringent requirements for a number of design or process parameters. Unlike piston-type pumps, centrifugal pumps can provide uniform delivery of pumped medium, whereas in order to meet uniformity condition on a piston-type pump, its design has to be made noticeably complicated, by arranging on the crankshaft several pistons making reciprocating movements with certain delay from each other. At the same time, delivery of pumped medium in discrete portions of set volume can also be a process requirement. Example of definitive design requirements can be the use of submerged pumps in cases, when it is necessary and only possible to install the pump below level of the pumped fluid.

Nature of pumped medium:

Characteristics of the pumped medium often become a decisive factor in pumping equipment selection. Different types of pumps are suitable for pumping of various media differing in viscosity, toxicity, abrasiveness and many other parameters. So screw pumps can pump viscous media with different inclusions without damaging structure of the medium, and can successfully be used in food-processing industry for pumping of jams and pastes with various fillers. Corrosion properties of the pumped medium determine material design of the selected pump, and toxicity – degree of its air-tightness.

Key design parameters:

Operational requirements specified by different industries can be satisfied by several types of pumps. In the situation like this preference is given to the type of pump which is most suitable under concrete values of key design parameters (capacity, head and power consumption). Tables which in general terms reflect application boundaries of most wide-spread types of pumps are given below.

Field of application (selection) of pumps by the created head

Under 10 m	From 10 to 100 m	From 100 to 1,000 m	From 1,000 to 10,000 m	From 10,000 m and over
One-stage centrifugal pumps				
		Multistage centrifugal pumps		
Axial flow pumps (head is up to 20-30 m)				
	Piston pumps			
	Screw pumps			
			Plunger pumps	
Vortex pumps				

Fields of application (selection) of pumps by capacity

Under 10 m3/h	From 10 to 100 m3/h	From 100 to 1,000 m3/h	From 1,000 to 10,000 m3/h	From 10,000 m3/h and over
One-stage centrifugal pumps				
		Multistage centrifugal pumps		
		Axial flow pumps		
Piston pumps				
Screw pumps				
Plunger pumps				
	Vortex pumps			

Only the pump which corresponds to all three groups of criteria can guarantee long-term and reliable operation.

Key design parameters of pumps

Regardless of diversity of machines used for pumping of fluids and gases, a number of key parameters defining their functioning: capacity, power consumption and head can be singled out.

Capacity (delivery, flow rate) – volume of medium pumped by a pump per unit of time. It is denoted by letter Q and has dimension in m^3/h, l/s, etc. Flow rate quantity includes only factual volume of displaced fluid ignoring return leakages. The theoretical and factual flow rate ratio is expressed by volumetric efficiency quantity:

But in modern pumps thanks to reliable sealing of pipelines and joints the factual capacity coincides with theoretical. In the majority of cases a pump is selected for the particular pipeline system and flow rate value is set in advance.

Head – energy imparted by pump to the pumped medium and attributed to unit of pumped medium mass. It is denoted by letter H and has dimension in meters. It should be clarified that the head is not geometrical characteristic and is not the height to which a pump can lift pumped medium.

Power consumption (shaft power) – power consumed by pump during operation. Power consumption differs from pump useful capacity consumed directly for imparting of energy to the pumped medium. Part of consumed power can be lost due to leakages, bearings friction, etc. Performance factor determines ratio between these quantities.

Calculation of these characteristic may vary for different types of pumps, which is associated with differences in their design and operating principles.

Calculation of performance capacity for different pumps

The entire diversity of types of pumps can be divided into two main groups with calculation of performance capacity having fundamental distinctions. By operating principle the pumps are subdivided into non positive displacement and positive displacement pumps. In the first case medium is pumped due to dynamic forces that influence it, and in the latter case – through variation of volume of pump operating chamber.

Non positive displacement pumps include:

1) Friction pumps (vortex, auger-type, disk, jet pumps, etc.)

2) Impeller pumps (axial-flow, centrifugal)

3) Electromagnetic pumps

Positive displacement pumps include:

1) Reciprocating pumps (piston and plunger, diaphragm pumps)

2) Rotary pumps

3) Impeller pumps

Formula used in calculation of performance capacity for most widely used types of pumps is given below.

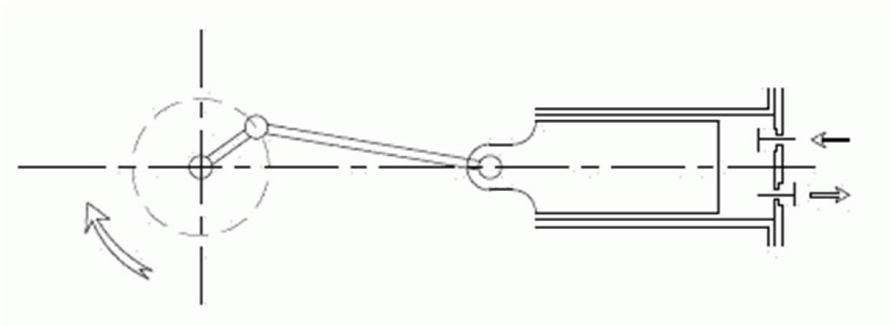

Piston pumps (positive displacement pumps)

The main operating component of the piston pump is cylinder in which piston is moving. The piston reciprocates by means of crank mechanism, thus providing consistent variation of operating chamber volume. In one complete turn of crank from the end point the piston makes full forward stroke (discharge) and reverse stroke (suction). During discharge in cylinder the piston creates overpressure, under the action of which suction valve opens and discharge valve closes, and fluid being pumped is delivered to the delivery pipeline. During suction reverse process takes place, during which vacuum is created in cylinder through piston backward movement; discharge valve closes preventing return flow of pumped fluid, and suction valve opens and cylinder is filled through it. Real performance capacity of piston pumps is somewhat different from theoretical, which is related to a number of factors, such as fluid leakages, degassing of gases dissolved in pumped fluids, delays in opening and closing of valves, etc.

For single-acting piston pump the flow rate formula will look like the following:

$$Q = F \cdot S \cdot n \cdot \eta_V$$

Q – flow rate (m^3/s)
F – piston cross-sectional area, m^2
S –piston stroke length, m
n – shaft rotation speed, s^{-1}
η_V – volumetric efficiency

For double-acting piston pump performance capacity, the formula will look slightly different, which is related to availability of piston rod reducing the volume of one of the cylinder operating chambers.

$$Q = F \cdot S \cdot n + (F-f) \cdot S \cdot n = (2F-f) \cdot S \cdot n$$

Q – flow rate (m^3/s)
F – piston cross-sectional area, m^2
f – rod cross-sectional area, m^2
S – piston stroke length, m
n – shaft rotation speed, s^{-1}
η_V – volumetric efficiency

With neglect of rod volume, general formula of piston pump performance capacity will look in the following way:

$Q = N \cdot F \cdot S \cdot n \cdot \eta_V$

where N = number of actions made in one shaft revolution.

<u>Gear pumps (positive displacement pumps)</u>

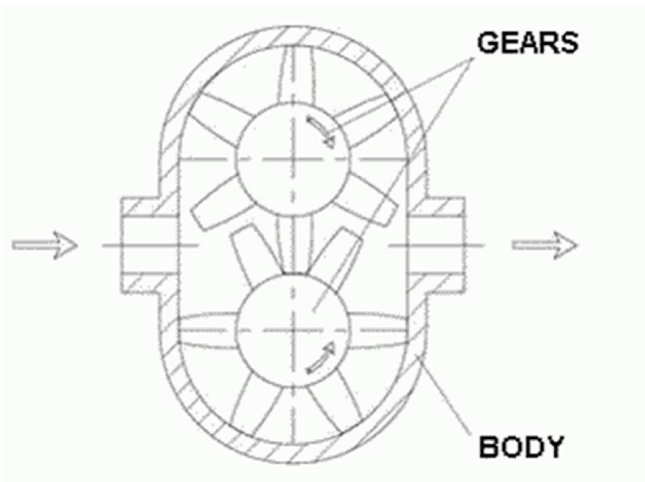

In case of gear pumps role of the operating chamber is performed by space limited by two adjacent teeth of gear. Two gears with internal or external engagement are installed inside the body. Pumped medium is sucked into the pump by vacuum created between gears teeth going out of engagement. Teeth transfer fluid inside pump body, and then it is squeezed to discharge pipe at the time when teeth engage again. For flow of pumped fluid the gear pumps are provided with end and tooth tip clearances between body and gears.

Gear pump performance capacity can be calculated in the following way:

$Q = 2 \cdot f \cdot z \cdot n \cdot b \cdot \eta_V$

Q – gear pump performance capacity, m^3/s
f – cross-sectional area of space between adjacent gear teeth, m^2
z – number of gear teeth
b – gear tooth length, m
n – teeth rotation speed, s^{-1}
η_V – volumetric efficiency

There is also an alternative formula for calculation of gear pump performance capacity:

$Q = 2 \cdot \pi \cdot D_H \cdot m \cdot b \cdot n \cdot \eta_V$

Q – gear pump performance capacity, m^3/s
D_H – gear pitch diameter,m
m – pitch of a gear, m
b – gear width, m
n – gear rotation speed, s^{-1}
η_V – volumetric efficiency

Screw pumps (positive displacement pumps)

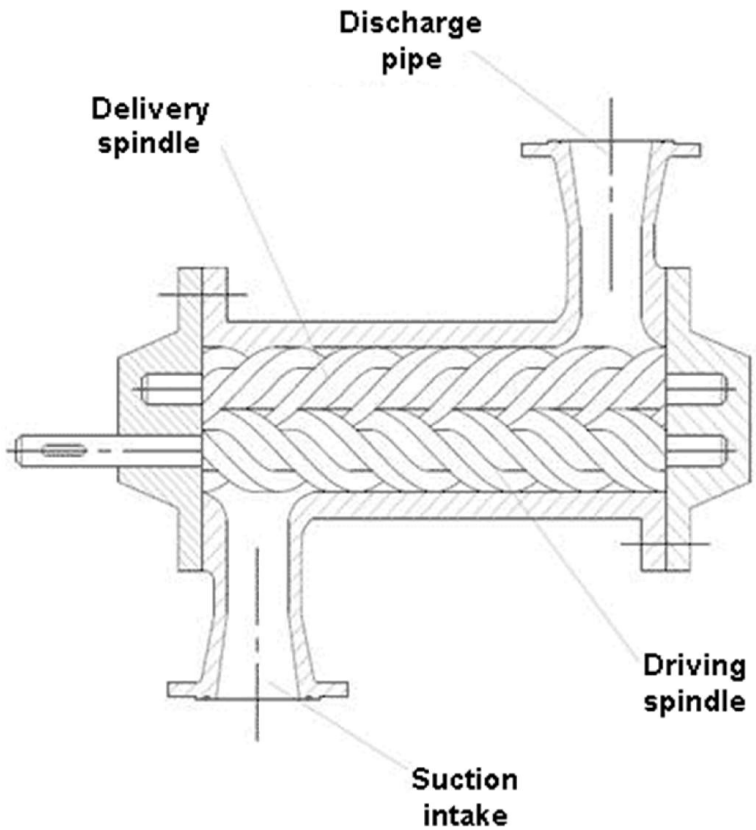

In pumps of this type, medium is pumped by means of screw operation (single-screw pump), or several screws being in engagement, if the question is of multi-screw pumps. Profile of screws is selected in a way for the pump injection zone to be isolated from the suction zone. The screws are mounted inside the body in such way that during their operation enclosed space zones filled with pumped medium were formed limited by outline of screws and body, and moving towards injection zone.

Single-screw pump performance capacity can be calculated in the following way:

$$Q = 4 \cdot e \cdot D \cdot T \cdot n \cdot \eta_V$$

Q – screw pump performance capacity, m^3/s
e – eccentricity, m

D – diameter of rotor screw, m
T – pitch of stator screw surface, m
n – rotor rotation speed, s^{-1}
η_V – volumetric efficiency

Centrifugal pumps

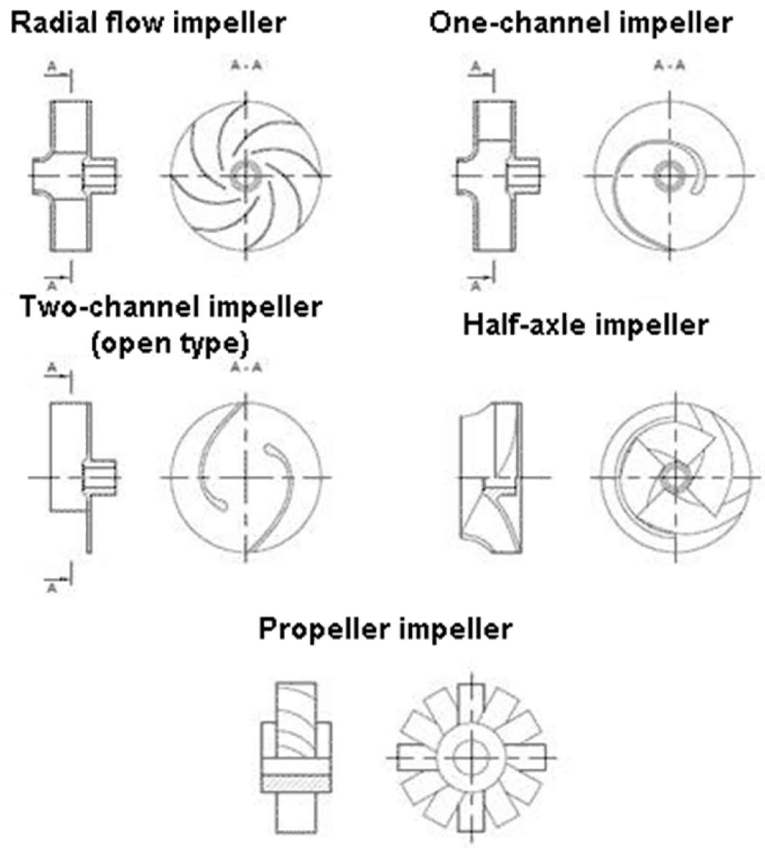

Centrifugal pumps are one of the most numerous representatives of non- positive displacement pumps that are widely used. The working member of centrifugal pumps is put on shaft impeller provided with blades enclosed between disks and mounted inside spiral-shaped body.

Impeller rotation creates centrifugal force affecting the mass of pumped media inside the impeller, and imparts to it part of kinetic energy passing then into potential energy of head. When this happens the vacuum created in the impeller provides continuous delivery of pumped medium from suction pipe. It is important to note that before starting operation the centrifugal pump should be first filled with the pumped medium, as otherwise suction force will not be sufficient for proper pump operation.

Centrifugal pump may have not one working mechanism, but several. In this case the pump is called multistage. In terms of design it is distinguished by having several impellers on the shaft at a time, and fluid successively passes through each of them. Having one and the same

performance capacity the multistage pump will create greater head as against single-stage pump analogous to it.

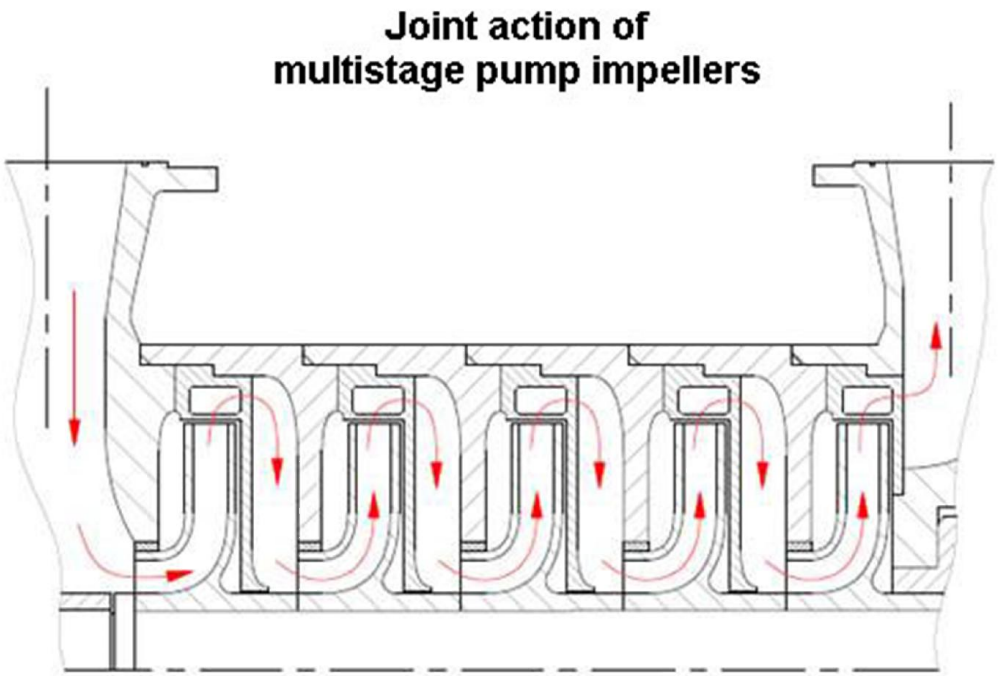

Centrifugal pump performance capacity can be calculated in the following way:

$Q = b_1 \cdot (\pi \cdot D_1 - \delta \cdot Z) \cdot c_1 = b_2 \cdot (\pi \cdot D_2 - \delta \cdot Z) \cdot c_2$

Q – centrifugal pump performance capacity, m^3/s
$b_{1,2}$ – widths of impeller pass through diameters D_1 and D_2,m
$D_{1,2}$ – inlet external diameter (1) and impeller external diameter(2), m
δ –thickness of blades, m
Z – number of blades
$C_{1,2}$ – radial components of absolute velocities at impeller inlet (1) and its outlet (2), m/s

Calculation of head

As it was stated above, the head is not geometrical characteristic and cannot be identified with height to which pumped fluid has to be lifted. The required head value is composed of several summands, with each of them having its own physical sense.

General formula of head calculation (diameters of suction and discharge pipes are taken as equal):

$H = (p_2 - p_1)/(\rho \cdot g) + H_г + h_п$

H – head, m
p_1 – intake tank pressure, Pa
p_2 – receiving tank pressure, Pa
ρ – density of the pumped medium, kg/m^3
g – gravity acceleration, m/s^2
$H_г$ – geometrical height of the pumped medium lift, m
$h_п$ – head overall loss, m

The first of summands of head calculation formula represents drop of pressures which should be overcome in the process fluid pumping. Occasionally, pressures p_1 and p_2 may coincide, with head created by pump spent on lifting fluid to certain height and overcoming the resistance.

The second summand characterizes geometrical height to which the pumped fluid has to be lifted. It is important to note that during determination of this quantity geometry of pressure pipeline which may have several lifts and falls is not taken into account.

The third summand characterizes drop of created head depending on characteristics of the pipeline through which medium is pumped. Real pipelines will inevitably exhibit resistance to fluid flow. In order to surmount it one needs to have head margin. Total resistance is composed of pipeline friction losses and losses due to local resistances, like pipe turns and branches, gate valves, passage widening and contraction, etc. Overall pipeline head losses are calculated by the formula:

$$H_{об} = H_T + H_{MC} = (\lambda \cdot l)/d_э \cdot [w^2/(2 \cdot g)] + \sum\zeta_{MC} \cdot [w^2/(2 \cdot g)] = ((\lambda \cdot l)/d_э + \sum\zeta_{MC}) \cdot [w^2/(2 \cdot g)]$$

$H_{об}$ – head overall losses made up of pipe friction losses $H_т$ and local resistance losses $H_{мс}$
λ – friction coefficient
l – pipeline length, m
$d_Э$ – pipeline equivalent diameter, m
w – flow rate, m/s
g – gravity acceleration, m/s^2
$[w^2/(2 \cdot g)]$ – velocity head, m
$\sum\zeta_{MC}$ – sum of all coefficients of local resistances

Calculation of pump power consumption

Several kinds of power are singled out according to transmission losses taken into account by different efficiency coefficients. Power spent directly on transmission of pumped fluid energy is calculated by the formula:

$$N_П = \rho \cdot g \cdot Q \cdot H$$

$N_П$ – useful power, W
ρ – density of the pumped medium, kg/m^3
g – gravity acceleration, m/s^2

Q – flow rate, m^3/s
H – total head, m

Power developed on pump shaft is larger than the useful one, and its excess is consumed for compensation of pump power losses. Interrelation between useful power and shaft power is set by pump efficiency. The pump efficiency includes leakages through seals and openings (volumetric efficiency), losses of head while pumped medium is flowing inside pump (hydraulic efficiency), and friction losses between moving parts of the pump, such as bearings and glands (mechanical efficiency).

$N_В = N_П/\eta_Н$

$N_В$ – power on pump shaft, W
$N_П$ – useful power, W
$\eta_Н$ – pump efficiency

In its turn, power developed by motor exceeds the shaft power, which is necessary to compensate for energy losses in its transmission from motor to pump. Electric motor power and shaft power are linked by efficiencies of transmission and motor.

$N_Д = N_В/(\eta_П \cdot \eta_Д)$

$N_Д$ – motor power consumption, W
$N_В$ – shaft power, W
$\eta_П$ – transmission efficiency
$\eta_Н$ – motor efficiency

Final motor generating capacity is calculated from motor power with regard to potential overload during start up.

$N_У = \beta \cdot N_Д$

$N_У$ – motor generating capacity, W
$N_Д$ – motor power consumption, W
β – power safety margin

Power safety margin can be tentatively selected from the table below:

N, kW	Under 1	From 1 to 5	from 5 to 50	Over 50
β	2 – 1.5	1.5 – 1.2	1.2 – 1.15	1.1

Extreme suction head (for centrifugal pump)

Centrifugal pump suction occurs due to pressure differential between vessel from which pumped medium is taken, and impeller blades. Excessive increase of pressure differential may result in

the occurrence of cavitation – process when pressure drops down to value at which fluid boiling temperature lowers below pumped medium temperature and it starts to evaporate in flow space forming multiple bubbles. Bubbles are carried away by stream further downstream where under action of building up pressure they are condensed and collapse, accompanied with multiple hydraulic shocks that negatively tell on pump service life. In order to avoid negative influence of cavitation the suction head of centrifugal pump has to be limited.

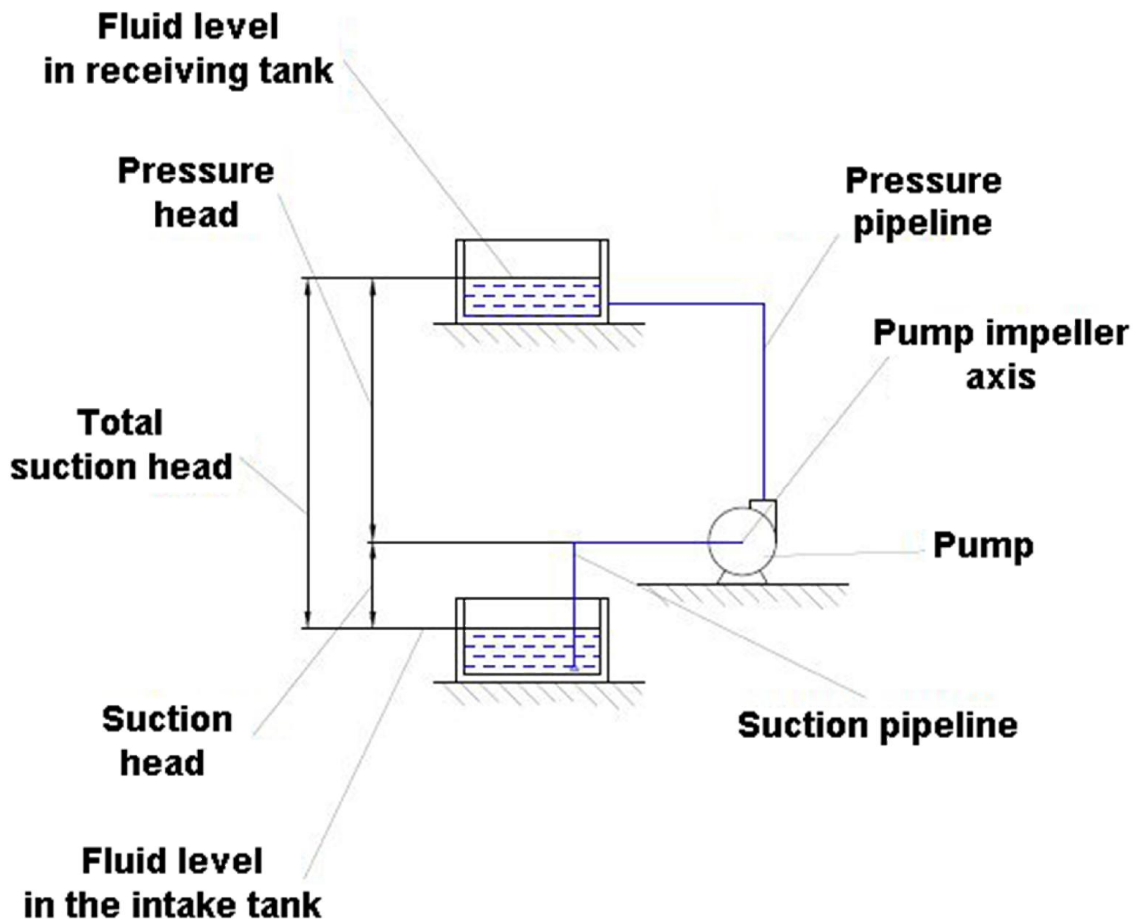

Geometric suction head can be determined by the formula:

$h_г = (P_0-P_1)/(\rho \cdot g) - h_{св} - w^2/(2 \cdot g) - \sigma \cdot H$

$h_Г$ – geometric suction head, m
P_0 – intake tank pressure, Pa
P_1 – pressure of the impeller blades, Pa
ρ – pumped medium density, kg/m^3
g – gravity acceleration, m/s^2
$h_{св}$ – losses due to overcoming suction pipeline hydraulic resistance, m
$w^2/(2 \cdot g)$ – suction pipeline velocity head, m

σ*H – added resistance losses proportional to head, m
where σ – cavitation factor, H – head created by pump

Cavitation factor can be calculated by the empirical formula:

$$\sigma = [(n \cdot \sqrt{Q}) / (126H^{4/3})]^{4/3}$$

σ – cavitation factor
n – impeller rotation speed, s^{-1}
Q – pump performance capacity, m^3/s
H – created head, m

There is also formula for centrifugal pumps for calculation of head margin providing absence of cavitation:

$$H_{кв} = 0{,}3 \cdot (Q \cdot n^2)^{2/3}$$

$H_{кв}$ – head margin, m
Q – centrifugal pump performance capacity, m^3/s
n – impeller rotation speed, s^{-1}

Example 1

Single-action plunger pump provides pumped medium flow rate of 1 m^3/h. Plunger diameter is 10 cm, and stroke length is 24 cm. Working shaft rotation speed is 40 rpm. Find the pump volumetric efficiency.

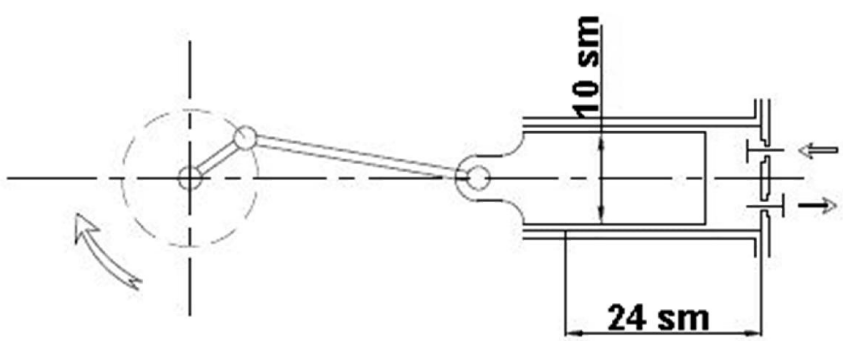

Solution:

Plunger cross-sectional area:

$$F = (\pi \cdot d^2)/4 = (3.14 \cdot 0.1^2)/4 = 0.00785\ m^2 2$$

Efficiency is expressed from the formula of plunger pump flow rate:

$\eta_V = Q/(F \cdot S \cdot n) = 1/(0{,}00785 \cdot 0{,}24 \cdot 40) \cdot 60/3600 = 0{,}88$

Example 2

Double-action two-piston pump creates head of 160 m in pumping oil having density 920 kg/m^3. Piston diameter is 8 cm, rod diameter – 1 cm, and piston stroke length equals to 16 cm. Working shaft rotation speed equals to 85 rpm. Calculate required power of electric motor (pump and electric motor efficiency should be taken as 0.95, and adjusting coefficient 1.1).

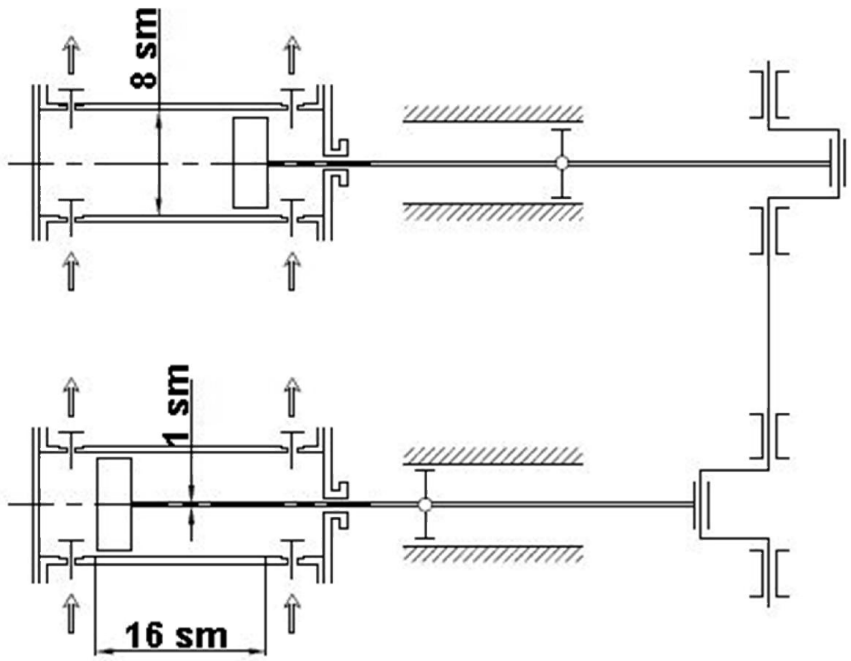

Solution:

Cross-sectional areas of piston and rod are:

$F = (3{,}14 \cdot 0.08^2)/4 = 0.005024$ m²

$F = (3.14 \cdot 0.01^2)/4 = 0.0000785$ m²

Pump performance capacity is:

$Q = N \cdot (2F\text{-}f) \cdot S \cdot n = 2 \cdot (2 \cdot 0.005024\text{-}0.0000785) \cdot 0.16 \cdot 85/60 = 0.0045195$ m³/h

Then we find pump useful power:

$N_П = 920 \cdot 9.81 \cdot 0.0045195 \cdot 160 = 6526.3$ W

Taken into account efficiency and adjusting coefficient we obtain final installed power:

$N_{УСТ} = 6526.3/(0.95 \cdot 0.95) \cdot 1.1 = 7954.5$ W = 7.95 kW

Example 3

Three-piston pump is pumping fluid with density of 1,080 kg/m^3 from open tank to vessel under pressure 1.6 bar with flow rate of 2.2 m^3/hour. Geometric head of fluid lift is 3.2 meters. Useful power consumed for fluid pumping is 4 kW. Find the head loss .

Solution:

We find head created by pump from the formula of useful power:

$H = N_П/(\rho \cdot g \cdot Q) = 4000/(1080 \cdot 9.81 \cdot 2.2) \cdot 3600 = 617.8$ m

We substitute found head value in the formula of the head expressed in difference of pressures, and find sought quantity

$h_п = H - (p_2 - p_1)/(\rho \cdot g) - H_г = 617.8 - ((1.6-1) \cdot 10^5)/(1080 \cdot 9.81) - 3.2 = 69.6$ m

Example 4

Real screw pipe performance capacity is 1.6 m^3/h. Pump geometrical characteristics are: eccentricity – 2 cm; rotor diameter – 7 cm; pitch of rotor screw surface – 14 cm. Rotor rotation speed equals to 15 rpm. Find the Pump volumetric efficiency.

Solution:

We express sought quantity from the formula of screw pump performance capacity

$\eta_V = Q/(4 \cdot e \cdot D \cdot T \cdot n) = 1.6/(4 \cdot 0.02 \cdot 0.07 \cdot 0.14 \cdot 15) \cdot 60/3600 = 0.85$

Example 5

Calculate head, flow rate and useful power of centrifugal pump pumping low-viscosity fluid with density of 1020 kg /m^3 from tank with overpressure 1.2 bar to tank with overpressure 2.5 bar along given pipeline with pipe diameter 20 cm. Total pipeline length (summarily with equivalent length of local resistances) equals to 78 m (friction coefficient is accepted as equal to 0.032). Difference of reservoirs heads is 8 meters.

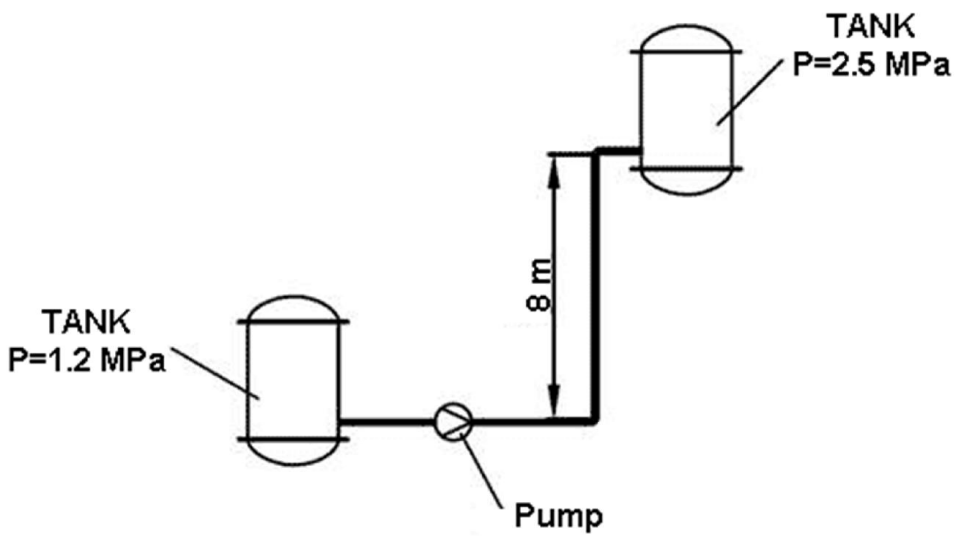

Solution:

For low-viscosity media we select optimal movement velocity in pipeline equal to 2 m/s. We calculate fluid flow rate through set pipeline:

$Q = (\pi \cdot d^2) / 4 \cdot w = (3{,}14 \cdot 0.2^2) / 4 \cdot 2 = 0.0628\ m^3/s$

Pipe velocity head is:

$w^2/(2 \cdot g) = 2^2/(2 \cdot 9.81) = 0{,}204$ m

At corresponding velocity head friction and local resistances losses will equal:

$H_T = (\lambda \cdot l)/d_э \cdot [w^2/(2g)] = (0.032 \cdot 78)/0.2 \cdot 0.204 = 2.54$ m

Total head will equal:

$H = (p_2 - p_1)/(\rho \cdot g) + H_г + h_п = ((2.5-1.2) \cdot 10^5)/(1020 \cdot 9.81) + 8 + 2.54 = 23.53$ m

Useful power is left to be determined:

$N_П = \rho \cdot g \cdot Q \cdot H = 1020 \cdot 9.81 \cdot 0.0628 \cdot 23.53 = 14786$ W